[illegible]

[illegible]

[illegible]

- 1999 [illegible]“[illegible]”[illegible]
- 1. [illegible] 2. [illegible] 3. [illegible] 4. [illegible] 5. [illegible] 6. [illegible] 7. [illegible] 8. [illegible] 9. [illegible] 10. [illegible]
- 1999 [illegible] 9 [illegible] BBC [illegible]“[illegible]”[illegible]
- 2002 [illegible]“[illegible]”[illegible]
- 2005 [illegible] 7 [illegible] 3 [illegible] 27.93% [illegible] 12.6% [illegible] 20 [illegible]

- 2008 [illegible] 100 [illegible]
- [illegible]
- [illegible] :“ [illegible] ”[illegible] :“ [illegible] ”

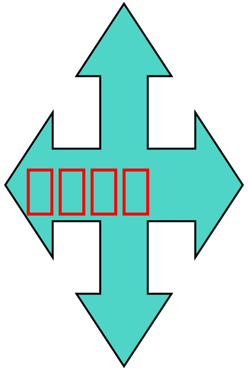

1.

名　称	时　间	纲领(口号)	斗争形式
法国里昂工人起义	1831 年 1834年	不能劳动而生,就要战斗而死! 推翻富人政权，争取民主共和国。	武装起义
英国宪章运动	1836-1848 年	要求取得普选权，工人参与国家管理。	集会、罢工、起义、和平请愿。
德意[illegible]工起义	1844年	反对私有制社会。	武装起义

2.

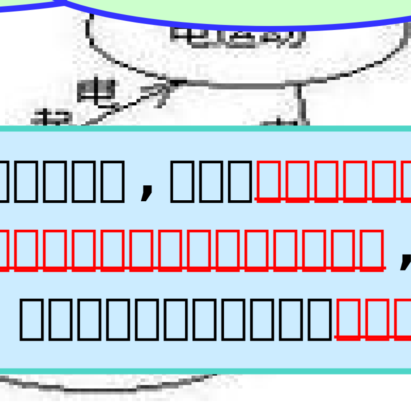

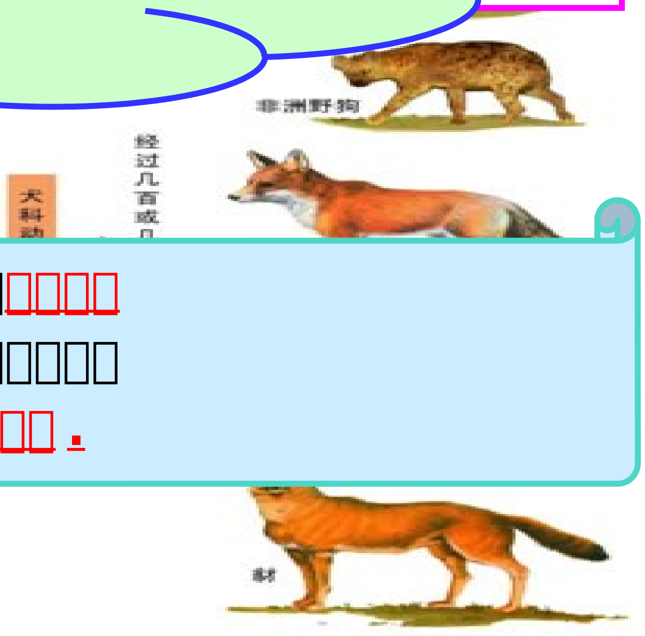

[illegible], [illegible], [illegible], [illegible]
, [illegible].([illegible]

[illegible], [illegible], [illegible],
[illegible], [illegible], [illegible]

3.

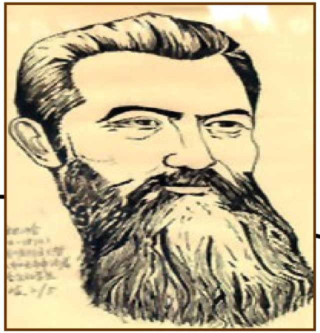

[illegible]

[illegible] → [illegible]

[illegible] → [illegible]

[illegible]

[illegible]

} [illegible]

} [illegible]

[illegible]

[illegible]

[illegible] P20 [illegible]

- [illegible]
- [illegible]

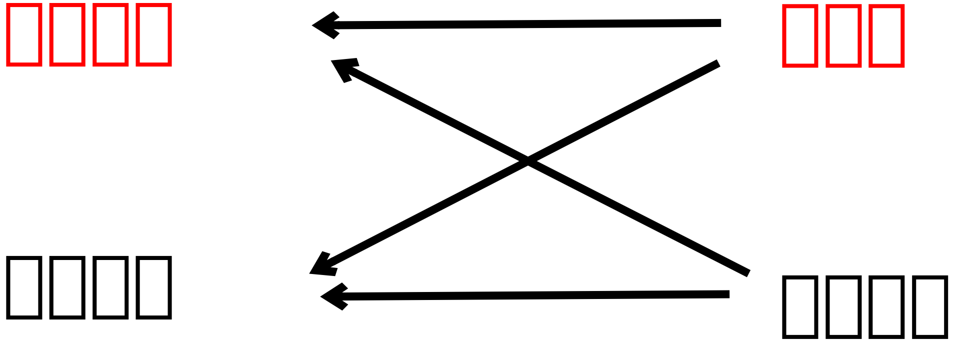

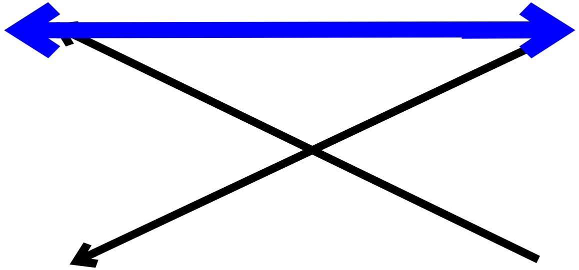

[illegible]

1 [illegible]

① [illegible]
[illegible] , [illegible] .

② [illegible]

- [illegible]

2. [illegible]

[illegible]

[illegible]

[illegible]

[illegible]

[illegible]

[illegible]

[illegible] ----- [illegible], [illegible], [illegible].

[illegible] ----- [illegible]“[illegible]”[illegible], [illegible].

[illegible]

[illegible]----[illegible]“[illegible]”

1. [illegible]

[illegible]

[illegible]

2. [illegible]

[illegible]

[illegible] 150 [illegible]

[illegible]

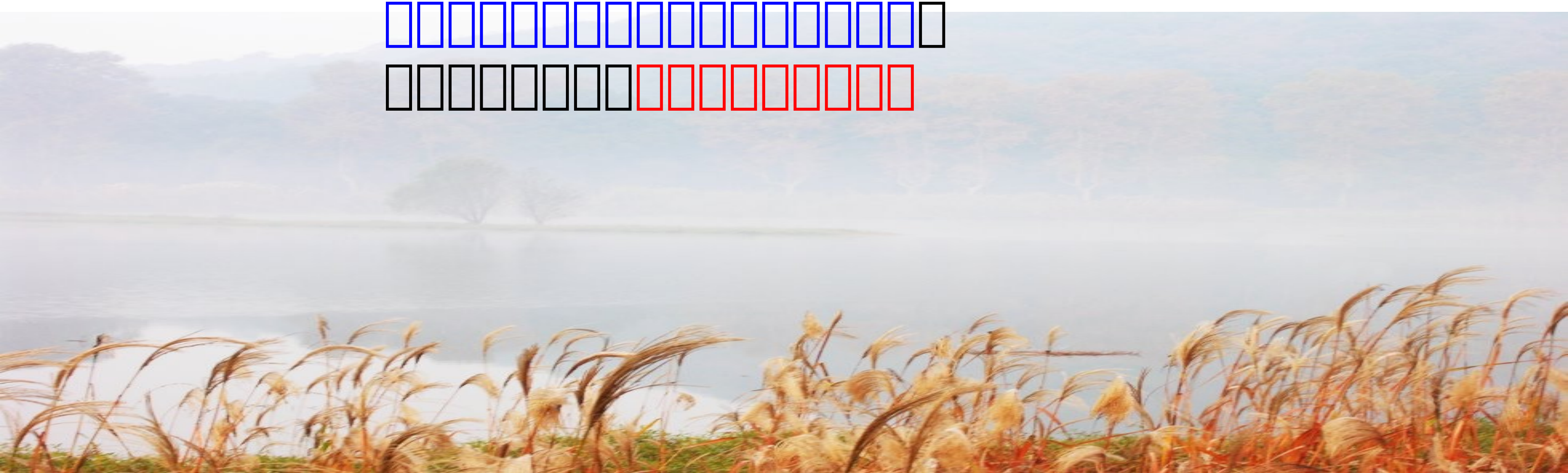

[illegible]

[illegible]

[illegible]

[illegible] （[illegible]） [illegible]

[illegible]

[illegible]

[illegible]

[illegible]

[illegible]

“[illegible]”[illegible]

[illegible]

[illegible]

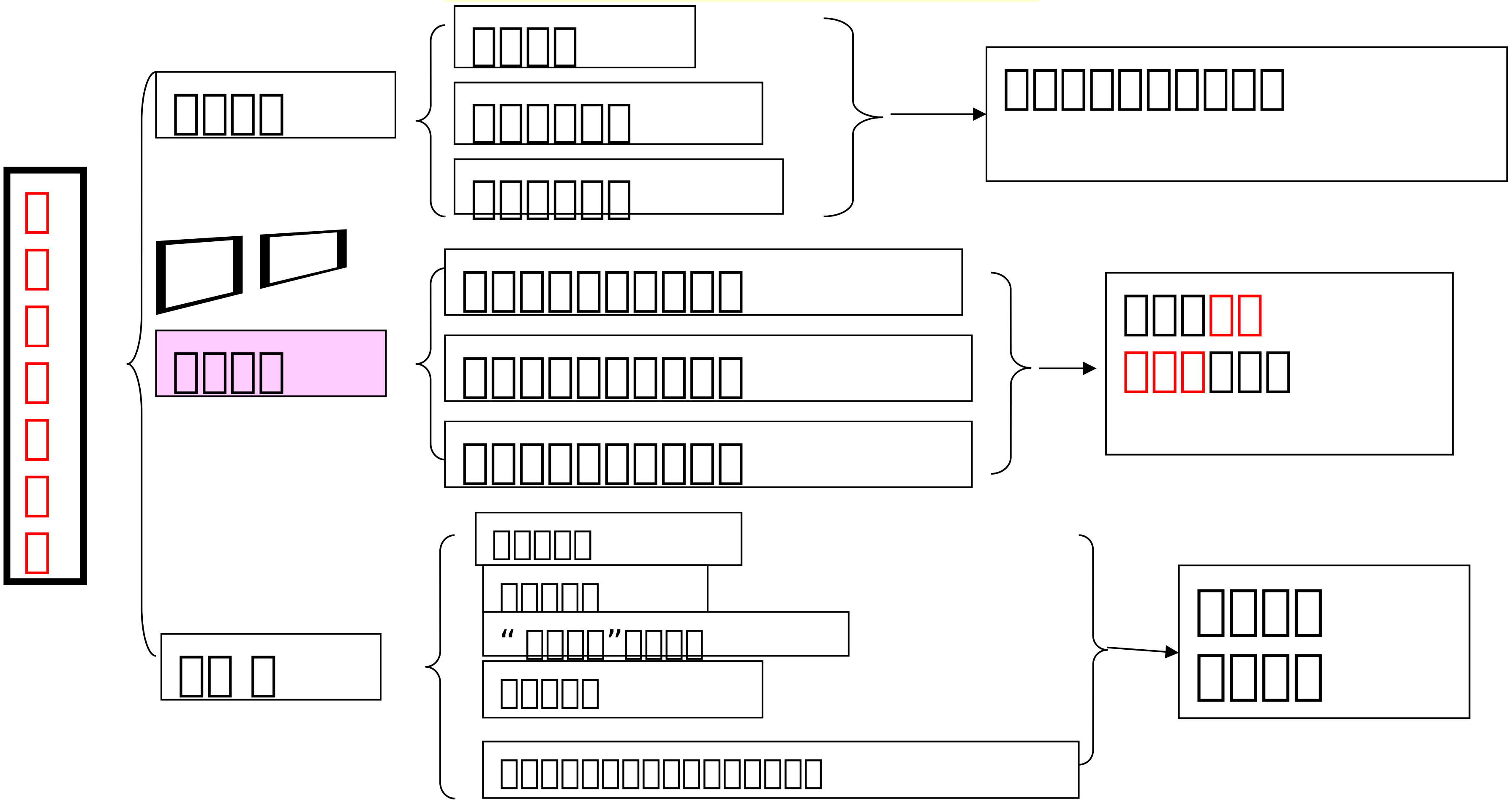

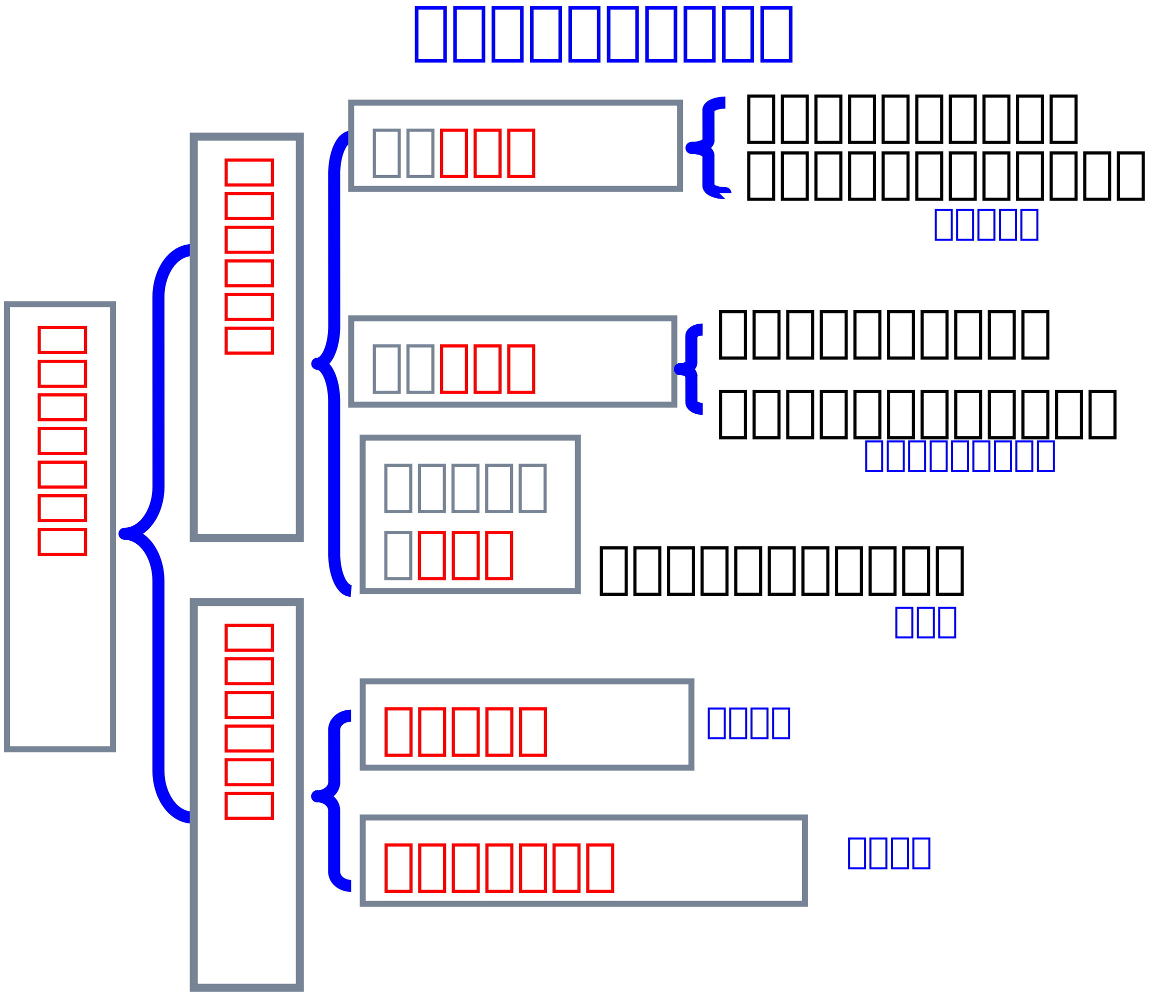

1. [illegible]“[illegible]”，[illegible]“[illegible]”[illegible]（ ）

① [illegible]

② [illegible]

③ [illegible]

④ [illegible]

A.③④　　B.②④　　C.①③　　D.①②

A

2. [illegible] (　　　　)

①19 [illegible]

② [illegible]

③ [illegible]

④ [illegible]

A [illegible]①②　B [illegible]③④　C [illegible]①③　D [illegible]②④

A

[illegible]“[illegible]”[illegible] A [illegible]③④[illegible]

3. [illegible]

① [illegible]

② [illegible]

③ [illegible]

④ [illegible]

A [illegible]①②③　　B [illegible]①③④

C [illegible]②③④　　D [illegible]①②③④

D

4. [illegible]

A. [illegible]“[illegible]”[illegible]

B. [illegible]

C. [illegible]

D. [illegible]

B